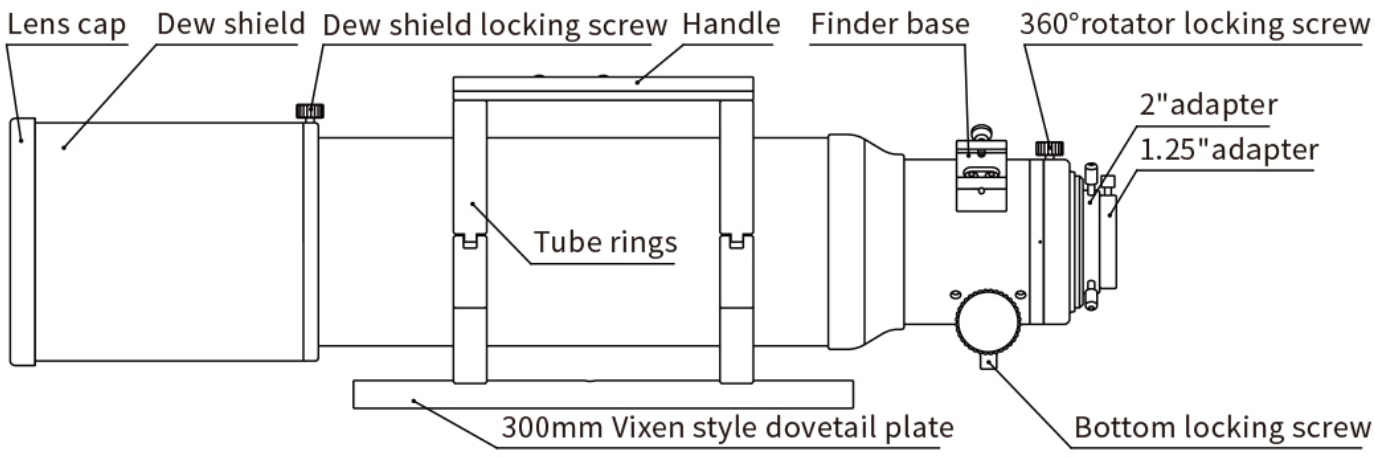
Lens cap
Dew shield
Dew shield locking screw
Handle
Finder base
360°rotator locking screw
2"adapter
1.25"adapter
Tube rings
300mm Vixen style dovetail plate
Bottom locking screw

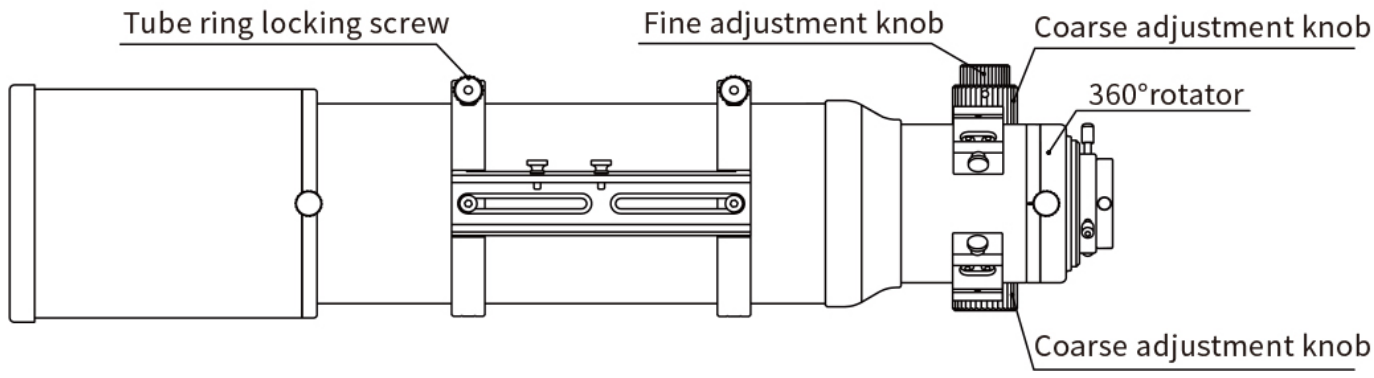
Tube ring locking screw
Fine adjustment knob
Coarse adjustment knob
360°rotator
Coarse adjustment knob

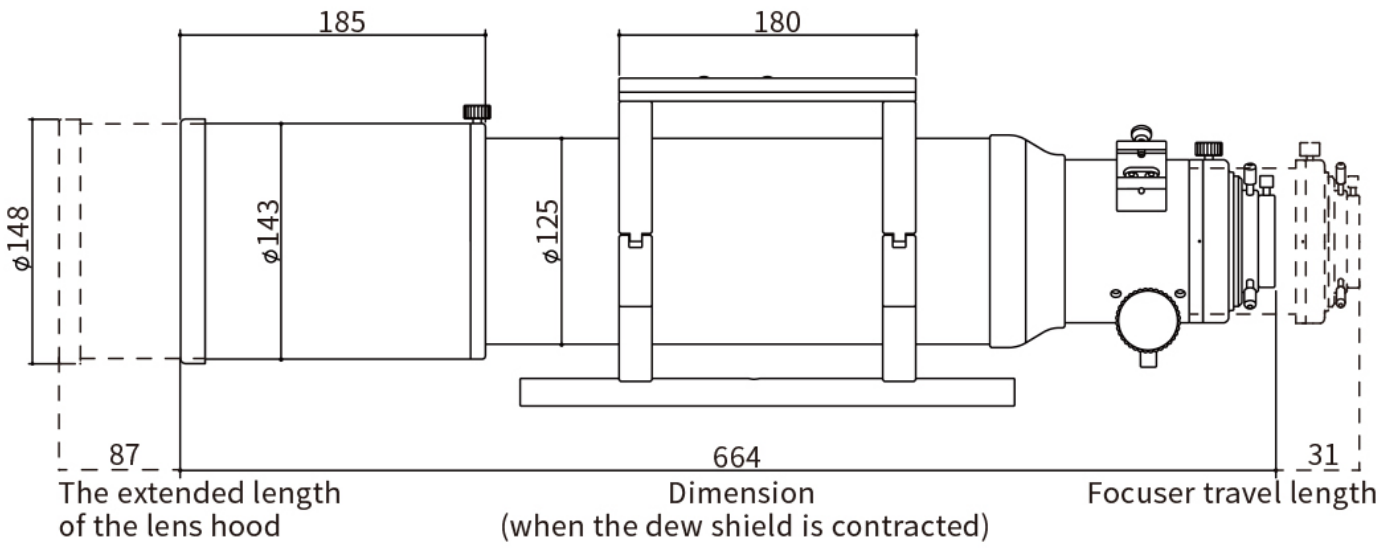
185
180
ø148
ø143
ø125
87
664
31
The extended length of the lens hood
Dimension (when the dew shield is contracted)
Focuser travel length

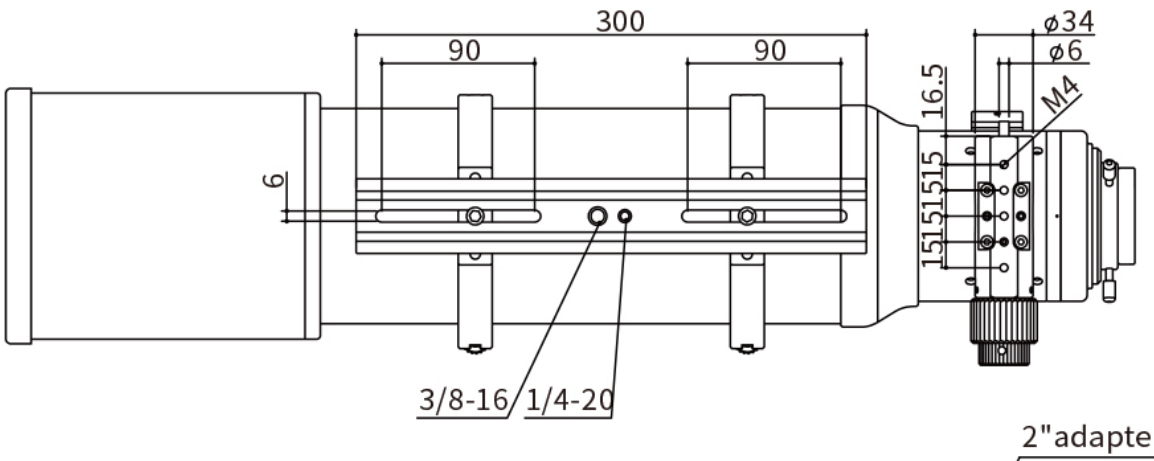
300
90
90
ø34
ø6
M4
16.5
15
15
15
15
6
3/8-16
1/4-20

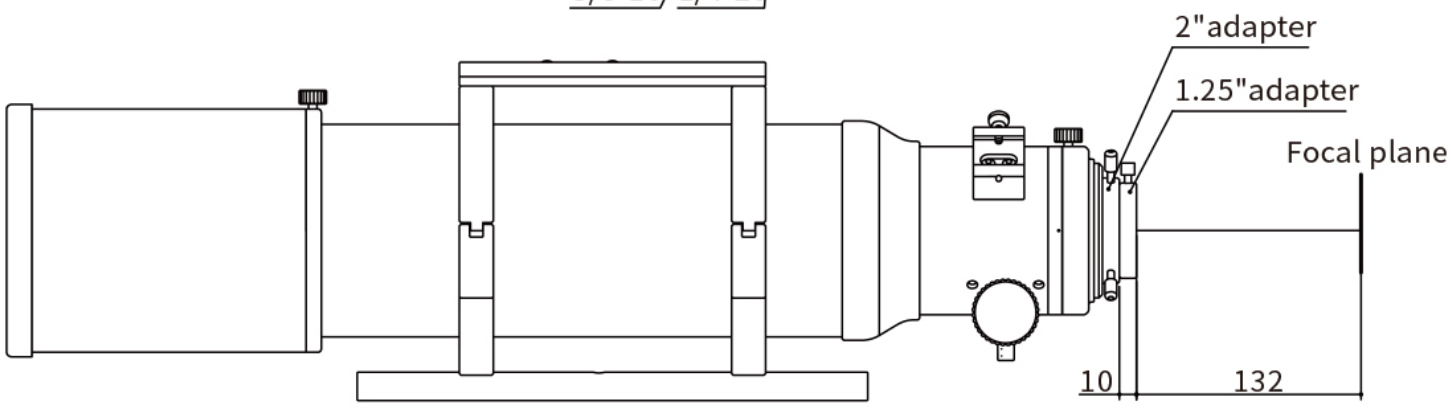
2"adapter
1.25"adapter
Focal plane
10
132

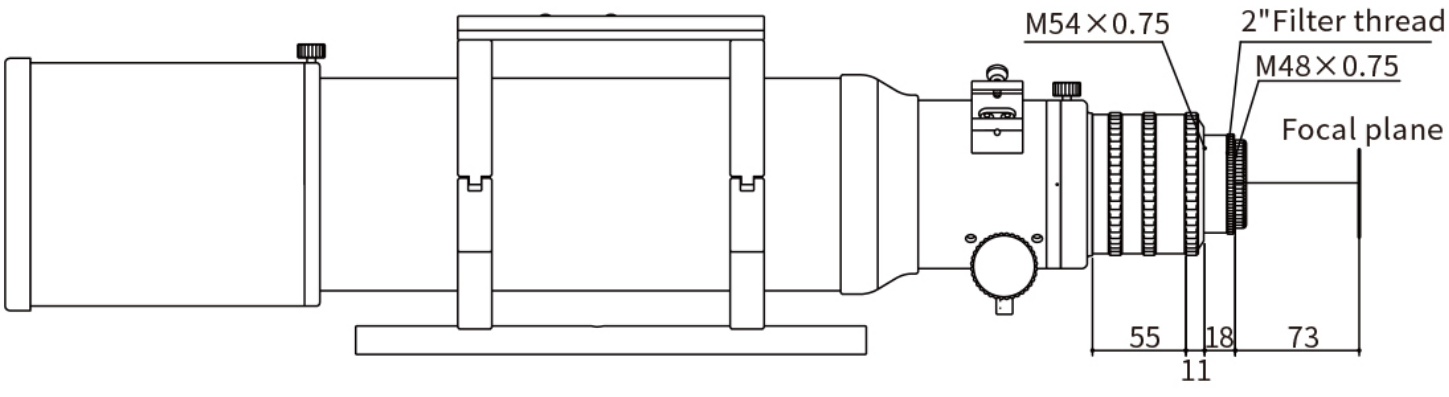
M54×0.75
2"Filter thread
M48×0.75
Focal plane
55
18
73
11